GENERAL NOTES

1. EACH SPLICE SHALL HAVE ITS OWN INDIVIDUAL ELECTRICAL INSULATING TUBE OR RESIN PACKAGE.
2. PULL BOX COVERS SHALL BE NON-METALLIC AND NON-CONDUCTIVE.

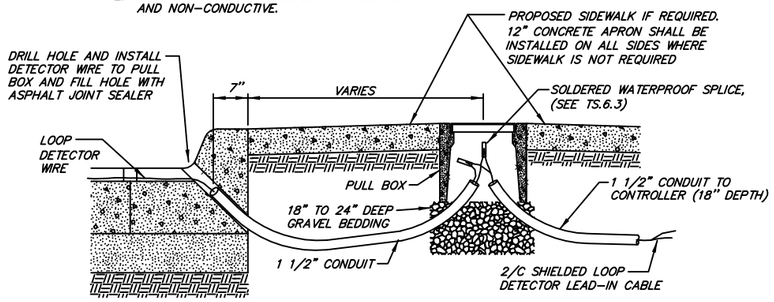

DETECTOR WIRE THROUGH EXISTING CURB TO PULL BOX

N.T.S.

TS.6.1

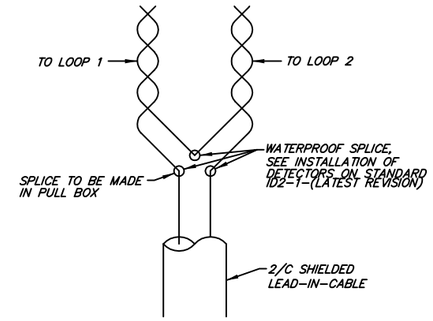

TYPICAL LOOP DETECTOR WIRE CONNECTION IN SERIES

N.T.S.

TS.6.2

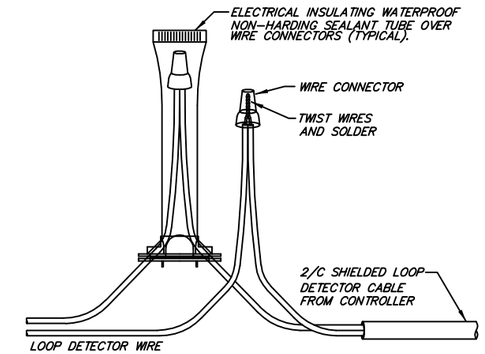

TYPICAL LOOP DETECTOR WIRE CONNECTION

N.T.S.

TS.6.3

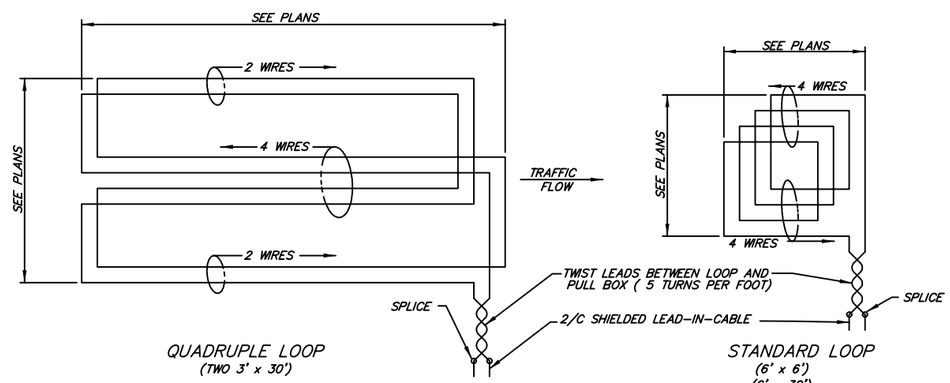

DETECTOR LOOP WIRE CONFIGURATION

N.T.S.

TS.6.4

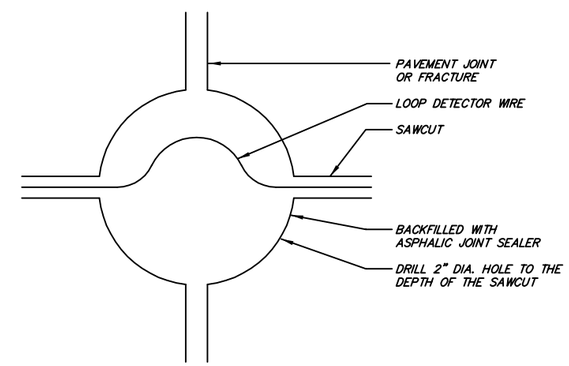

LOOP WIRE CROSSING AT CONC. CONTRACTION JOINT

N.T.S.

TS.6.6

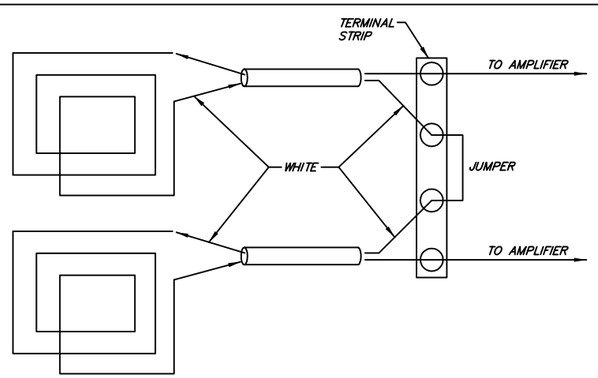

SERIES CONNECTED LOOPS

N.T.S.

TS.6.9

Revision	Date	By

Standard Drawings
LOOP DETECTORS
Public Works Construction

The City of Fort Smith ARKANSAS

CITY OF FORT SMITH
Engineering Department
623 Garrison Avenue, Room 409
Fort Smith, Arkansas 72901
Phone (479)784-2225 Fax (479)784-2245

Project:	Details
Date:	NOV 2012
Scale:	As Shown
Drawn By:	RBR
Dwg. No.:	TS6
Sheet No:	37

G:\DRAWINGS\00-Standard Details\2012\DWG\ 37-TS6.dwg 11/05/12-13:57 RBR