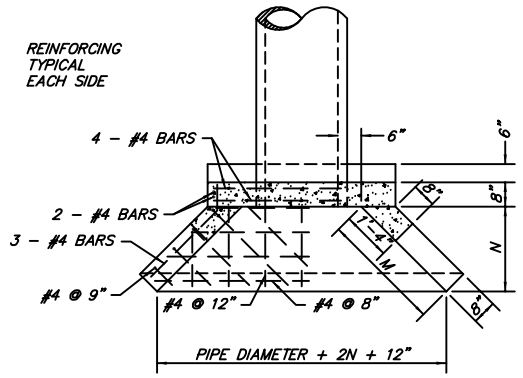

PLAN VIEW

HEADWALLS WITH 45° WINGWALLS		
DIAMETER	CONC. QTY CY	
	SINGLE PIPE	DOUBLE PIPE
18"	0.84	1.16
24"	1.19	1.65
30"	1.82	2.53
36"	2.29	3.26
42"	2.90	4.18
48"	4.02	5.86

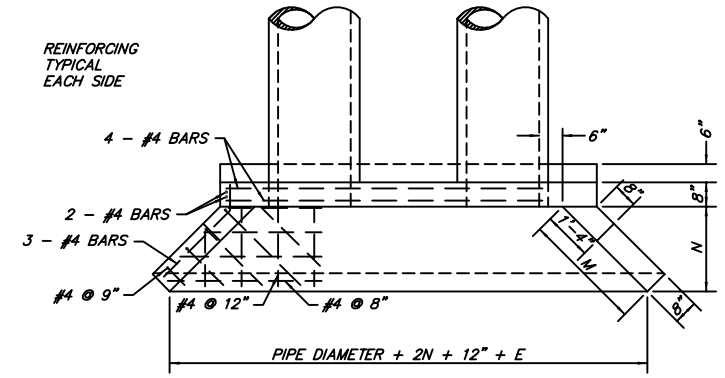

PLAN VIEW

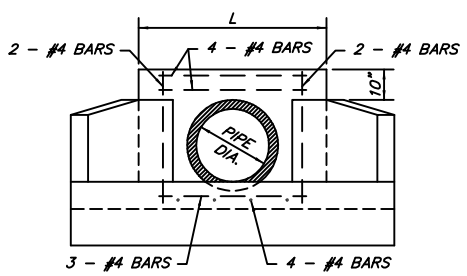

ELEVATION

HEADWALL SINGLE PIPE

N.T.S.

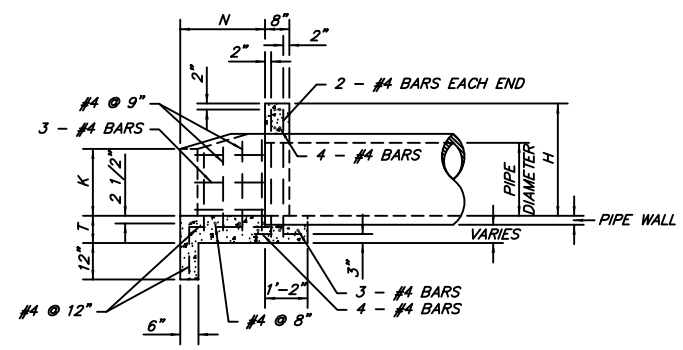

SECTION

HEADWALL WITH 45° WINGWALLS

N.T.S.

DR.4.1

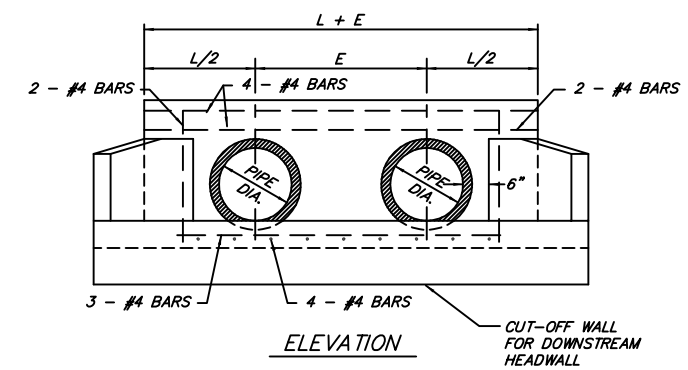

ELEVATION

HEADWALL DOUBLE PIPE

N.T.S.

W= WALL THICKNESS OF PIPE

DIA.	D	E
18"	6'–1"	3'–0"
24"	6'–1 1/2"	4'–0"
30"	6'–1 3/4"	5'–0"
36"	8'–1 3/4"	6'–0"
42"	8'–2"	6'–6"
48"	8'–2"	7'–0"
54"	8'–4"	7'–6"
60"	8'–4"	8'–0"
72"	8'–4"	9'–0"

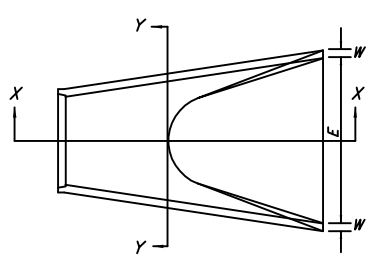

PLAN

END VIEW

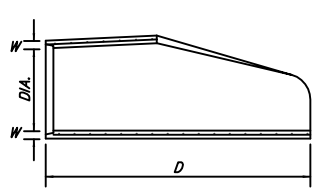

SECTION X–X

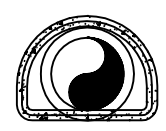

SECTION Y–Y

FLARED END SECTION

N.T.S.

DR.4.2

DIMENSIONS								
I.D.	E	L+E	T	H	K	L	M	N
18"	2'–6"	6'–6"	9"	2'–8"	1'–7"	4'–0"	2'–1 1/4"	1'–6"
24"	3'–0"	7'–6"	9"	3'–2"	1'–10"	4'–6"	2'–10"	2'–0"
30"	3'–9"	8'–10"	10"	3'–8"	2'–1"	5'–1"	3'–6 1/2"	2'–6"
36"	4'–6"	10'–4"	10"	4'–2"	2'–4"	5'–8"	4'–3"	3'–0"
42"	5'–3"	11'–6"	10"	4'–8"	2'–8"	6'–3"	4'–11 1/2"	3'–6"
48"	6'–0"	12'–10"	12"	5'–5"	3'–2"	6'–10"	5'–8"	4'–0"

NOTES:

1. ALL CONCRETE SHALL BE CLASS "AAA" 4000 psi.
2. ALL EXPOSED CONCRETE SHALL HAVE A CLASS 2, RUBBED FINISH.
4. ALL EXPOSED CORNERS TO BE CHAMFERED 3/4".
5. 2" DIAMETER WEEP HOLES SHALL BE INSTALLED 4'–0" O.C. AT BOTTOM OF HEADWALLS.
6. WHERE HANDRAIL IS SPECIFIED, THE SUPPORTS SHALL BE CENTERED IN THE WALL PER DETAILS ON DWG FC3.
7. HIGH POINT OF HEADWALL SHALL NOT PROJECT MORE THAN 3" ABOVE SLOPE.

Revision	Date	By

Standard Drawings

DRAINAGE IMPROVEMENTS – HEADWALLS

Public Works Construction

The City of Fort Smith Arkansas

CITY OF FORT SMITH
Engineering Department
623 Garrison Avenue, Room 409
Fort Smith, Arkansas 72901
Phone (479)784–2225 Fax (479)784–2245

Project:	Details
Date:	NOV 2012
Scale:	As Shown
Drawn By:	RBR
Dwg. No.:	DR5
Sheet No:	6

G:\DRAWINGS\00-Standard Details\2012\DWG\ 6-DR5.dwg 11/05/12-13:38 RBR