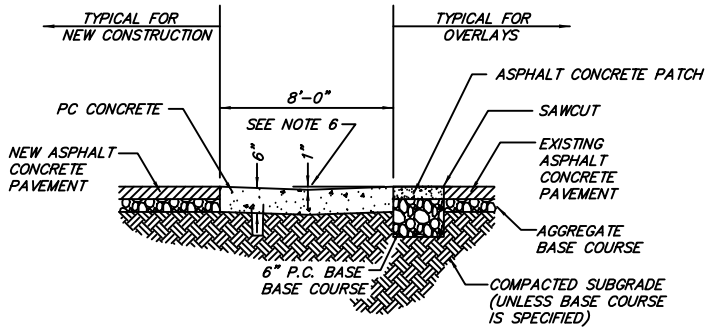

SECTION "A–A"

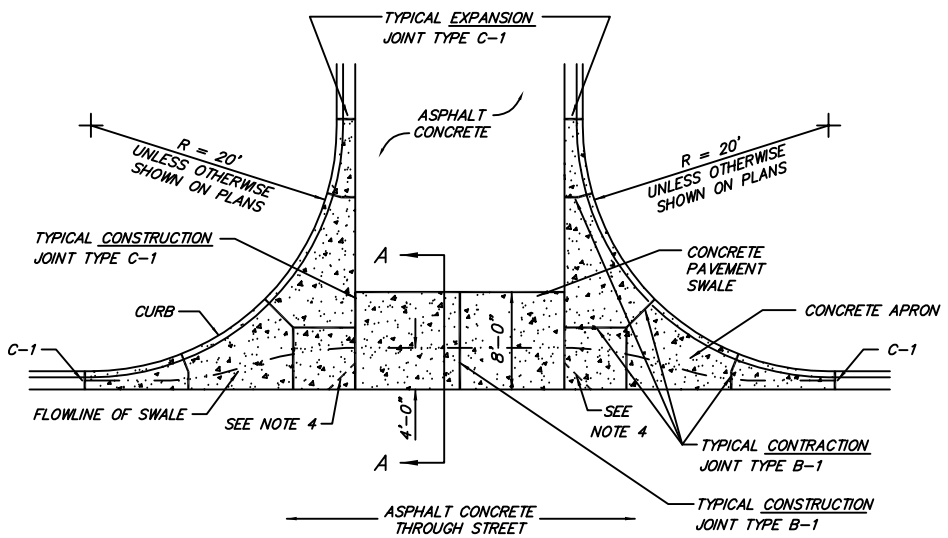

PLAN VIEW

CONCRETE APRON AND SWALE

N.T.S.

ST.2.1

CONSTRUCTION JOINT

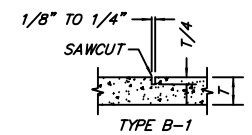

CONTRACTION JOINT

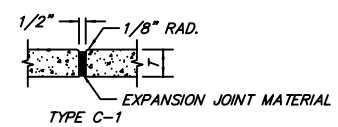

EXPANSION JOINT

NOTES:

1. CONCRETE PAVEMENT APRONS AND SWALE SHALL BE P.C. CONCRETE, 6" THICK, UNLESS OTHERWISE NOTED.
2. SLOPE PAVEMENT FOR DRAINAGE. REFER TO ELEVATIONS SHOWN ON PLANS.
3. SWALE TO BE CONSTRUCTED ONLY WHEN DRAINAGE FLOWS ACROSS INTERSECTING STREET.
4. ROUND OFF CORNER OF APRON 12" WHEN APRONS ARE CONSTRUCTED WITHOUT A SWALE.
5. CONSTRUCTION AND PAYMENT OF CURB SHALL BE INCIDENTAL TO APRON. PAY LIMIT OF APRON IS MEASURED TO THE BACK OF CURB.
6. LOCATION OF SWALE MAY BE ADJUSTED IN THE FIELD BY THE ENGINEER.

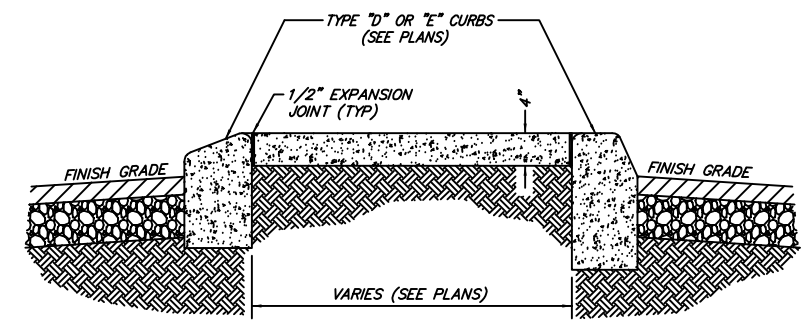

CONCRETE ISLAND

N.T.S.

ST.2.2

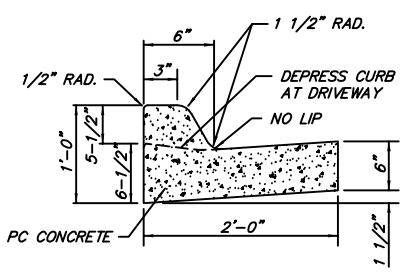

CURB & GUTTER

TYPE "A" (BARRIER)

N.T.S.

ST.2.3

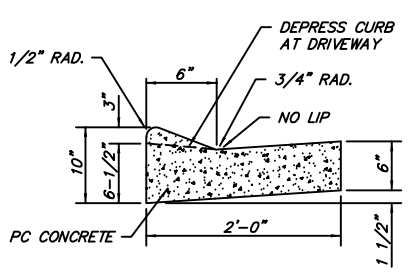

CURB & GUTTER

TYPE "B" (MOUNTABLE)

N.T.S.

ST.2.4

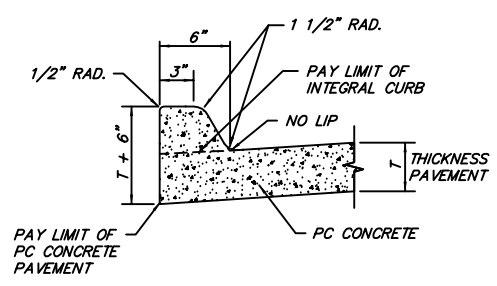

CURB & GUTTER

TYPE "C" (INTEGRAL)

N.T.S.

ST.2.5

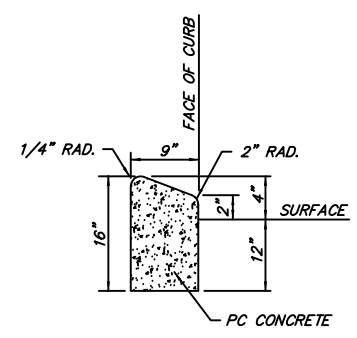

CURB & GUTTER

TYPE "D" (ISLAND MOUNTABLE)

N.T.S.

ST.2.6

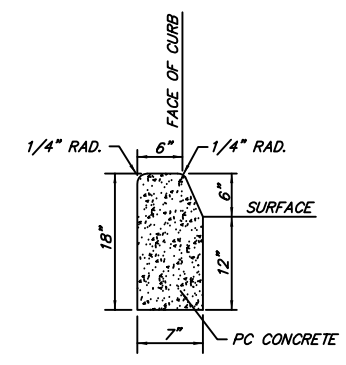

CURB & GUTTER

TYPE "E" (ISLAND BARRIER)

N.T.S.

ST.2.7

NOTES:

1. CONCRETE FOR CURB AND GUTTER SHALL BE CLASS "AA" 3500 psi. CONCRETE FOR APRONS, SWALES, AND ISLAND SLABS ON GRADE SHALL BE CLASS "AA" 3500 psi.
2. ALL EXPOSED CONCRETE SHALL HAVE A CLASS 6 BROOMED FINISH.
3. CONTRACTION JOINTS FOR CURB AND GUTTER SHALL BE INSTALLED AT 20' O.C. WHERE CURBING IS CONSTRUCTED ADJACENT TO OR ON RIGID PAVEMENTS, THE LOCATIONS AND WIDTHS OF THE JOINTS SHALL COINCIDE WITH THOSE IN THE PAVEMENT. EXPANSION JOINTS SHALL BE INSTALLED AT STATIONARY STRUCTURES, AT BEGINNING AND END OF RETURNS, AND AT A MAX. OF 100' O.C.
4. CONTRACTION JOINTS FOR APRONS, SWALES, AND ISLAND SLABS SHALL BE INSTALLED AS SHOWN ON THE PLANS OR IF NOT SHOWN, AT 12' MAXIMUM SPACING. EXPANSION JOINTS SHALL BE PLACED AS SHOWN ON THE PLANS, AT ALL ADJACENT STRUCTURES, AND AT THE BEGINNING AND END OF CURB RETURNS.

Revision	Date	BY

Standard Drawings
STREET IMPROVEMENTS – CURBS & MISC.
Public Works Construction

The City of Fort Smith Arkansas

CITY OF FORT SMITH
Engineering Department
623 Garrison Avenue, Room 409
Fort Smith, Arkansas 72901
Phone (479)784-2225 Fax (479)784-2245

Project:	Details
Date:	NOV 2012
Scale:	As Shown
Drawn By:	RBR
Dwg. No.:	ST2
Sheet No:	16

G:\DRAWINGS\00-Standard Details\2012\DWG\ 16-ST2.dwg 11/05/12-13:47 RBR