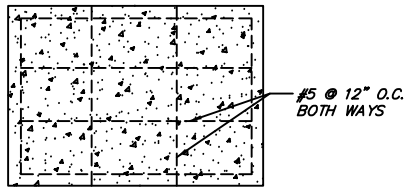

FOOTING

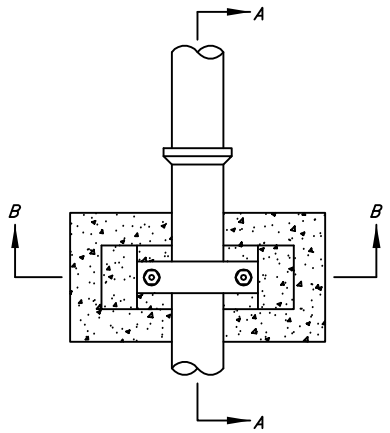

PLAN

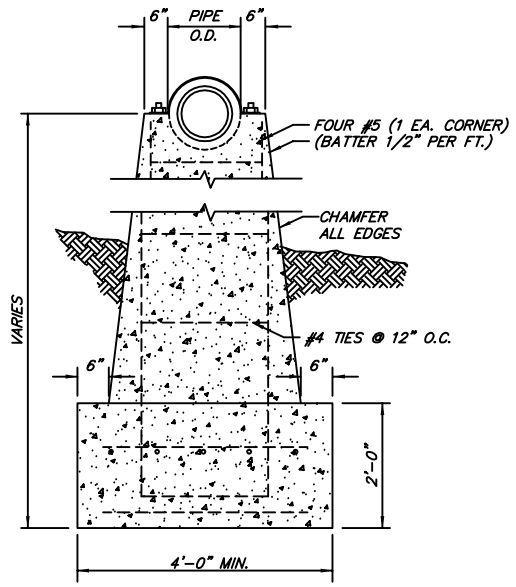

SECTION A-A

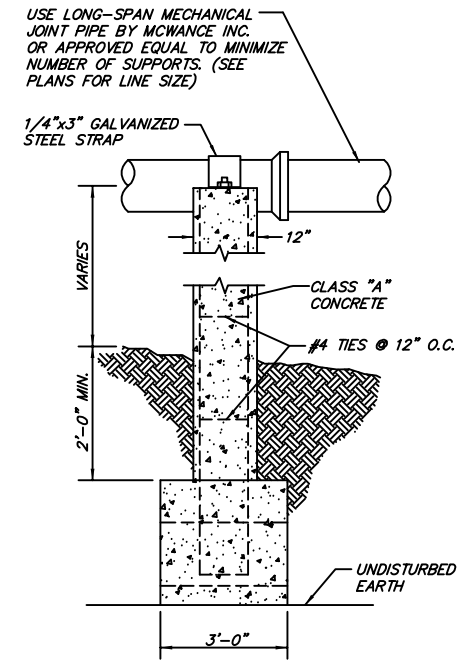

SECTION B-B

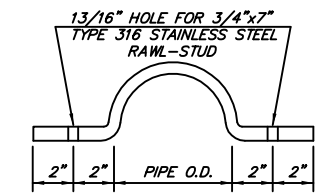

STEEL STRAP

CONCRETE PIPE SUPPORT
N.T.S.
SS.3.1

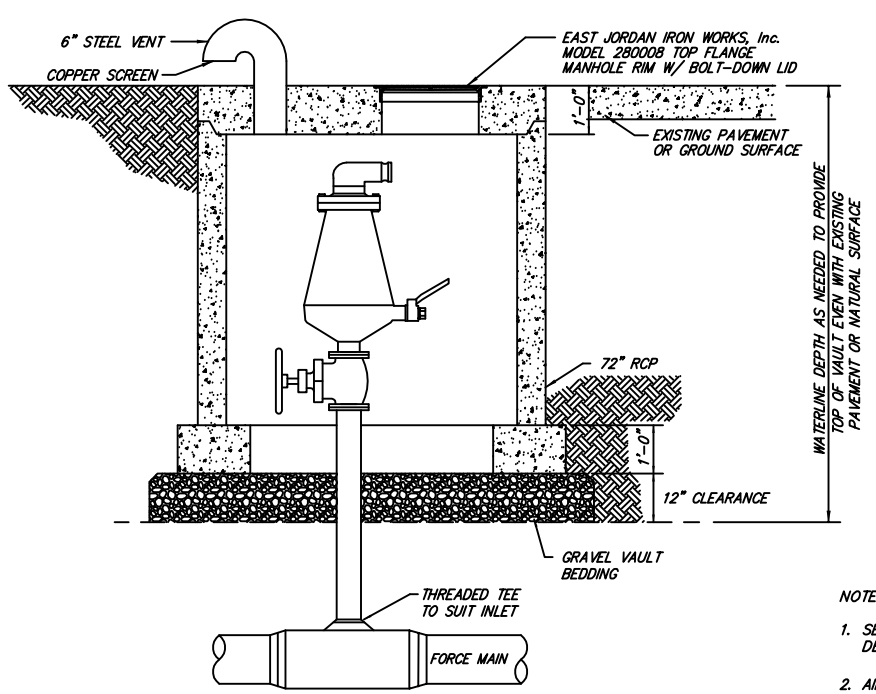

SELECTION CHART

DIAMETER FORCE MAIN	AIR RELEASE VALVE
4" - 12"	2"
14" - 20"	3"
24" - 36"	4"

NOTES:

1. SEE DETAIL WA.3.6 FOR DIMENSIONS AND DETAILS FOR THE CONCRETE VAULT.
2. AIR RELEASE VALVE SHALL BE A.R.I. MODEL D-020 OR APPROVED EQUAL.

AIR RELEASE VALVE
N.T.S.
SS.3.2

Revision	Date	BY

Standard Drawings
SANITARY SEWER IMPROVEMENTS
Public Works Construction

The City of Fort Smith ARKANSAS

CITY OF FORT SMITH
Engineering Department
623 Garrison Avenue, Room 409
Fort Smith, Arkansas 72901
Phone (479)784-2225 Fax (479)784-2245

Project:	Details
Date:	NOV 2012
Scale:	As Shown
Drawn By:	RBR
Dwg. No.:	SS3
Sheet No:	14

G:\DRAWINGS\00-Standard Details\2012\DWG\ 14-SS3.dwg 11/05/12-13:43 RBR