NOTE:
MANHOLE COVER SHALL BE INSTALLED FLUSH WITH PAVEMENT GRADE AND CROSS SLOPE.

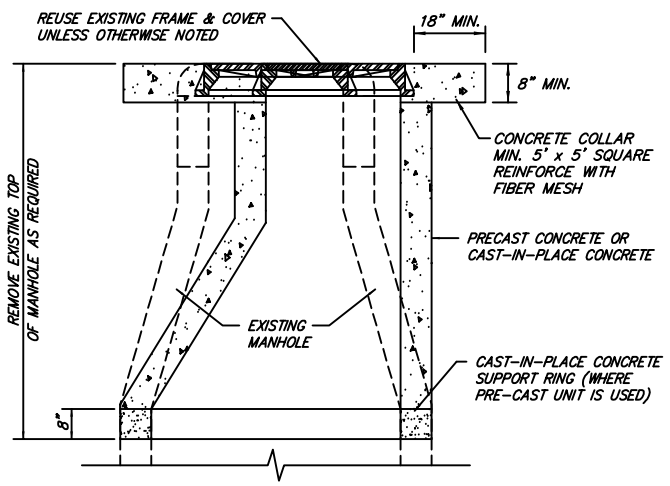

MANHOLE
OFFSET MODIFICATION
N.T.S.
SS.2.1

NOTE:
MANHOLE COVER SHALL BE INSTALLED FLUSH WITH PAVEMENT GRADE AND CROSS SLOPE.

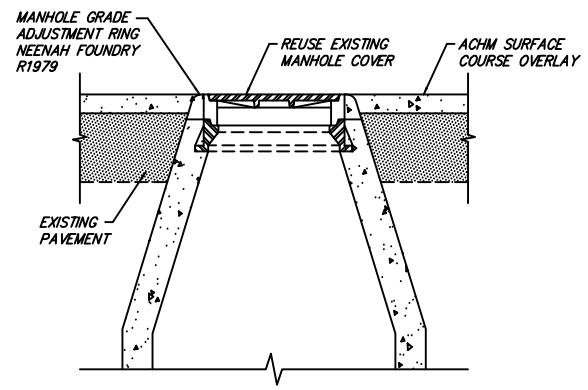

MANHOLE
GRADE ADJUSTMENT
N.T.S.
SS.2.2

NOTE:
MANHOLE COVER SHALL BE INSTALLED FLUSH WITH PAVEMENT GRADE AND CROSS SLOPE.

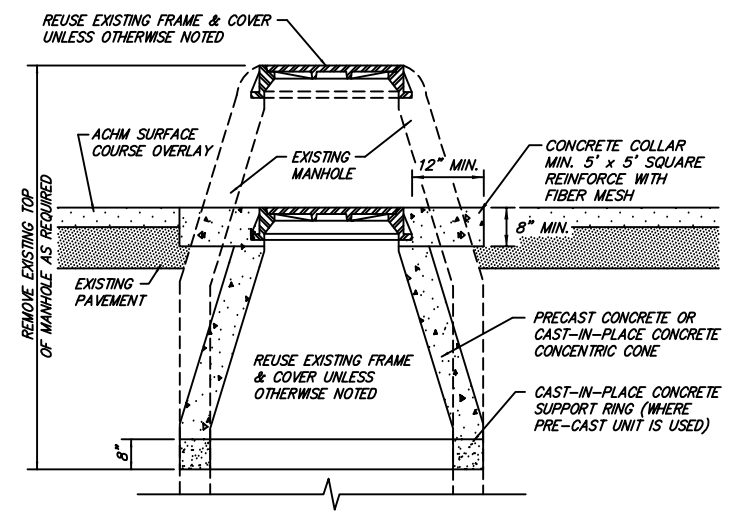

MANHOLE
GRADE MODIFICATION
N.T.S.
SS.2.3

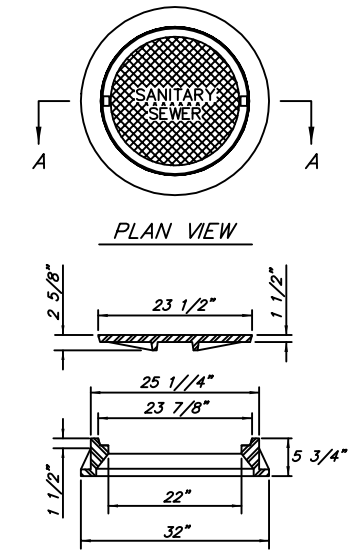

ASSEMBLED WEIGHT:
260 LBS.

EAST JORDAN IRON WORKS 1348-1 OR DEETER FOUNDRY 1266 FROM NEENAH

SANITARY SEWER
MANHOLE FRAME & COVER
N.T.S.
SS.2.4

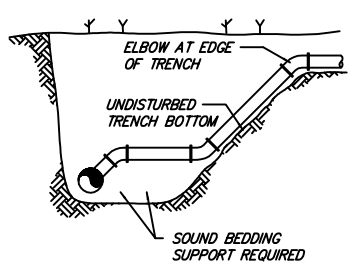

SEWER SERVICE
LATERAL CONNECTION
N.T.S.
SS.2.5

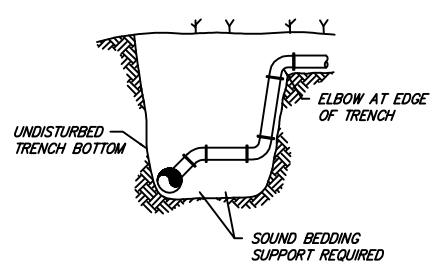

SEWER SERVICE
LATERAL CONNECTION
N.T.S.
SS.2.6

NOTE:
SERVICE CLEANOUT TO BE INSTALLED ON ALL SEWER SERVICE LINES AT RIGHT-OF-WAY LINE.

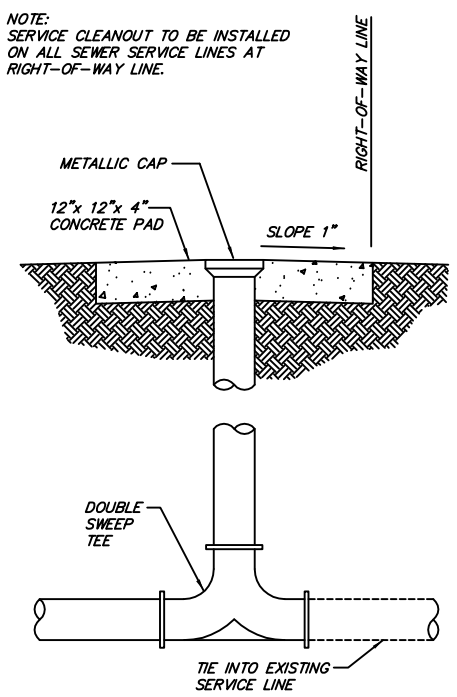

SEWER SERVICE CONNECTION
AND CLEANOUT COLLAR
N.T.S.
SS.2.7

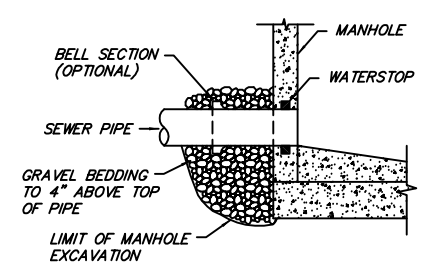

PIPE CONNECTION DETAIL
N.T.S.
SS.2.8

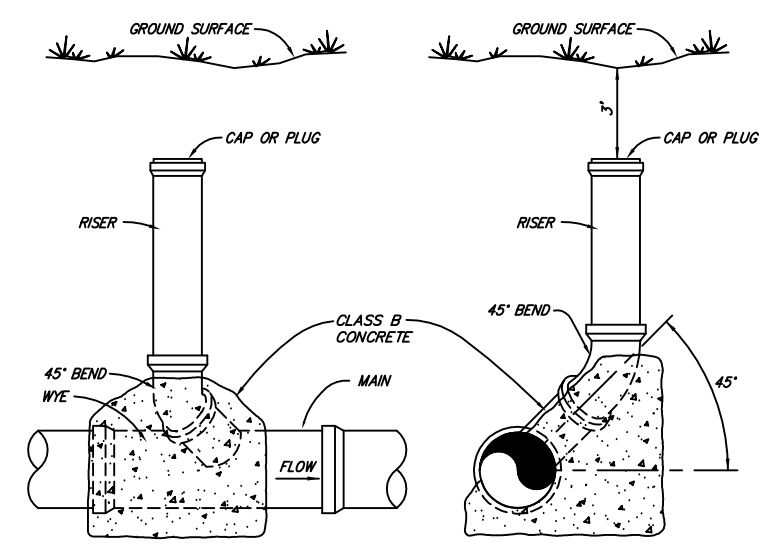

SERVICE RISER DETAIL
N.T.S.
SS.2.9

Revision	Date	BY

Standard Drawings
SANITARY SEWER IMPROVEMENTS
Public Works Construction

The City of Fort Smith ARKANSAS

CITY OF FORT SMITH
Engineering Department
623 Garrison Avenue, Room 409
Fort Smith, Arkansas 72901
Phone (479)784-2225 Fax (479)784-2245

Project:	Details
Date:	NOV 2012
Scale:	As Shown
Drawn By:	RBR
Dwg. No.:	SS2
Sheet No:	13

G:\DRAWINGS\00-Standard Details\2012\DWG\ 13-SS2.dwg 11/05/12-13:43 RBR